Southern Cranes & Access

Kato CR-200Ri

Southern Cranes & Access Ltd
Pollards Way, Southwater, Horsham, RH13 9AQ

Access hire: 01403 339105 . Crane hire: 01403 790874
sales@southerncranes.co.uk . www.southerncranes.co.uk

Cranes
Access
Transport
Contract Lifting
Training

Kato CR-200Ri

Lifting capacities

Based on ISO 4035
Not exceed 75% of static tipping loads

6.5m — 28.0m Boom

Working radius (m)	(5.4m) Outriggers fully extended (5.4m) - 360° full range						(4.8m) Outriggers intermediately extended (4.8m) - over side						(4.3m) Outriggers intermediately extended (4.3m) - over side						(3.2m) Outriggers intermediately extended (3.2m) - over side						(1.93m) Outriggers completely retracted (1.93m) - over side (H-type outrigger only)					
	6.5m Boom	10.95m Boom	15.4m Boom	19.6m Boom	23.8m Boom	28.0m Boom	6.5m Boom	10.95m Boom	15.4m Boom	19.6m Boom	23.8m Boom	28.0m Boom	6.5m Boom	10.95m Boom	15.4m Boom	19.6m Boom	23.8m Boom	28.0m Boom	6.5m Boom	10.95m Boom	15.4m Boom	19.6m Boom	23.8m Boom	28.0m Boom	6.5m Boom	10.95m Boom	15.4m Boom	19.6m Boom	23.8m Boom	28.0m Boom
2.5	20.00*	12.50	10.00	7.50			20.00*	12.50	10.00	7.50			20.00*	12.50	10.00	7.50			17.70	12.50	10.00	7.50			8.15	7.95	7.90	7.50		
3.0	18.50*	12.50	10.00	7.50			18.00*	12.50	10.00	7.50			17.45	12.50	10.00	7.50			15.20	12.50	10.00	7.50			5.80	5.65	5.60	6.00		
3.5	16.20	12.50	10.00	7.50	6.00	5.00	16.00	12.50	10.00	7.50	6.00	5.00	15.00	12.50	10.00	7.50	6.00	5.00	10.40	10.20	10.00	7.50	6.00	5.00	4.35	4.20	4.15	4.55	4.75	4.95
4.0	14.00	12.50	10.00	7.50	6.00	5.00	14.00	12.50	10.00	7.50	6.00	5.00	13.00	12.50	10.00	7.50	6.00	5.00	7.95	7.75	7.70	7.50	6.00	5.00	3.40	3.25	3.20	3.55	3.75	3.90
4.5	12.00	12.00	10.00	7.50	6.00	5.00	12.00	12.00	10.00	7.50	6.00	5.00	11.15	12.00	10.00	7.50	6.00	5.00	6.30	6.15	6.10	6.50	6.00	5.00	2.70	2.55	2.50	2.85	3.05	3.20
5.0		11.05	10.00	7.50	6.00	5.00		10.90	10.00	7.50	6.00	5.00		8.75	8.70	7.50	6.00	5.00		5.00	4.95	5.30	5.55	5.00		2.00	2.00	2.30	2.50	2.65
5.5		10.20	9.30	7.50	6.00	5.00		8.85	8.80	7.50	6.00	5.00		7.20	7.15	7.50	6.00	5.00		4.10	4.05	4.45	4.65	4.85		1.60	1.55	1.85	2.05	2.20
6.0		9.30	8.55	7.50	6.00	5.00		7.40	7.35	7.50	6.00	5.00		6.05	6.00	6.40	6.00	5.00		3.45	3.40	3.75	3.95	4.15		1.25	1.20	1.55	1.70	1.85
6.5		7.85	7.80	7.10	5.75	5.00		6.30	6.25	6.65	5.75	5.00		5.15	5.10	5.45	5.70	5.00		2.95	2.90	3.20	3.40	3.55		0.95	0.90	1.25	1.45	1.55
7.0		6.75	6.70	6.55	5.40	4.65		5.40	5.35	5.75	5.40	4.65		4.45	4.35	4.75	4.95	4.65		2.50	2.45	2.75	2.95	3.10		0.70		1.00	1.20	1.30
8.0		5.15	5.10	5.45	4.75	4.05		4.15	4.05	4.45	4.65	4.05		3.35	3.30	3.65	3.85	4.00		1.80	1.75	2.10	2.30	2.40						
9.0		4.05	4.00	4.35	4.25	3.60		3.25	3.15	3.50	3.75	3.60		2.60	2.50	2.90	3.10	3.25		1.30	1.20	1.55	1.75	1.90						
10.0			3.20	3.55	3.75	3.20			2.45	2.85	3.05	3.20			1.90	2.30	2.50	2.65			0.80	1.15	1.35	1.50						
11.0			2.55	2.90	3.10	2.90			1.95	2.30	2.50	2.65			1.45	1.80	2.00	2.15			0.50	0.80	1.00	1.15						
12.0			2.05	2.40	2.60	2.65			1.50	1.85	2.05	2.20			1.10	1.45	1.65	1.80				0.55	0.75	0.90						
13.0			1.65	2.00	2.20	2.35			1.15	1.50	1.70	1.85			0.80	1.10	1.30	1.45				0.35	0.55	0.70						
14.0			1.45(13.5m)	1.65	1.85	2.00			1.00(13.5m)	1.20	1.40	1.55			0.65(13.5m)	0.85	1.05	1.20					0.35	0.50						
15.0				1.35	1.55	1.70				0.95	1.15	1.30				0.65	0.85	1.00						0.35						
16.0				1.10	1.30	1.45				0.75	0.95	1.10				0.45	0.65	0.80												
17.0				0.90	1.10	1.25				0.60	0.75	0.90				0.30	0.50	0.65												
18.0				0.80(17.5m)	0.90	1.05				0.50(17.5m)	0.60	0.75					0.35	0.50												
19.0					0.75	0.90					0.45	0.60						0.35												
20.0					0.60	0.75					0.35	0.50																		
21.0					0.50	0.60						0.35																		
22.0					0.45(21.5m)	0.50																								
23.0						0.40																								
24.5						0.30																								
Critical boom angle	—	—	—	—	—	*18°*	—	—	—	—	*22°*	*35°*	—	—	—	*12°*	*33°*	*42°*	—	—	*33°*	*41°*	*50°*	*56°*	—	*36°*	*59°*	*64°*	*69°*	*72°*
Standard hook	for 20 ton						for 20 ton						for 20 ton						for 20 ton						for 20 ton					
Hook mass	150kg						150kg						150kg						150kg						150kg					
Parts of line	7*,6	6	4				7*,6	6	4				7*,6	6	4				6	4					6	4				

(Unit: Metric ton)

■When outriggers are not used

Working radius (m)	Stationary on rubber								Pick & carry (less than 2km/h)								Working radius (m)
	6.5m Boom		10.95m Boom		15.4m Boom		19.6m Boom		6.5m Boom		10.95m Boom		15.4m Boom		19.6m Boom		
	Over front	360° full range	Over front	360° full range	Over front	360° full range	Over front	360° full range	Over front	360° full range	Over front	360° full range	Over front	360° full range	Over front	360° full range	
3.0	6.00	4.00	6.00	4.00	5.00	4.00	5.00	4.00	4.30	2.80	4.30	2.80	4.10	2.80	4.10	2.80	3.0
3.5	6.00	3.50	6.00	3.50	5.00	3.50	5.00	3.50	4.30	2.30	4.30	2.20	4.10	2.20	4.10	2.30	3.5
4.0	6.00	2.80	6.00	2.80	5.00	2.80	5.00	3.00	4.30	1.90	4.30	1.70	4.10	1.70	4.10	1.90	4.0
4.5	5.50	2.20	5.50	2.20	5.00	2.20	5.00	2.50	3.80	1.50	3.80	1.40	3.70	1.40	3.75	1.60	4.5
5.0			5.00	1.80	4.50	1.70	4.50	2.00			3.30	1.10	3.30	1.10	3.30	1.30	5.0
5.5			4.50	1.40	4.00	1.35	4.00	1.65			2.90	0.85	2.90	0.70	3.00	1.05	5.5
6.0			3.90	1.10	3.60	1.05	3.60	1.35			2.60	0.45	2.60	0.35	2.75	0.75	6.0
6.5			3.35	0.85	3.20	0.75	3.25	1.10			2.30		2.30		2.50	0.50	6.5
7.0			2.90	0.55	2.80		3.10				2.00		2.00		2.30		7.0
8.0			2.20		2.10		2.40				1.30		1.35		1.80		8.0
9.0					1.60		1.85						0.80		1.40		9.0
10.0					1.20		1.45						0.35		0.95		10.0
11.0					0.85		1.15								0.50		11.0
12.0					0.55		0.85										12.0
13.0							0.60										13.0
14.0							0.40										14.0
Critical boom angle	—	—	*25°*	*37°*	*25°*	*60°*	*36°*	*66°*	—	—	*25°*	*46°*	*40°*	*61°*	*50°*	*66°*	Critical boom angle
Standard hook	For 20 ton								For 20 ton								Standard hook
Hook mass	150kg								150kg								Hook mass
Parts of line	4								4								Parts of line

(Unit: Metric ton)

Kato CR-200Ri

Lifting capacities

Based on ISO 4035
Not exceed 75% of static tipping loads

19.6m Boom+4.0m Jib

(5.4m)

Outriggers fully extended (5.4m) - 360° full range

Boom angle (°)	Offset 7° Working radius (m)	Offset 7° Load (ton)	Offset 25° Working radius (m)	Offset 25° Load (ton)	Offset 45° Working radius (m)	Offset 45° Load (ton)	Offset 60° Working radius (m)	Offset 60° Load (ton)
83	2.7	2.50	3.9	2.00	4.9	1.50	5.4	1.20
80	3.9	2.50	5.1	2.00	6.0	1.50	6.5	1.20
75	6.0	2.50	7.1	2.00	7.9	1.50	8.3	1.20
70	8.0	2.50	9.0	2.00	9.7	1.50	10.0	1.20
65	9.9	2.50	10.8	2.00	11.3	1.50	11.6	1.20
62	11.0	2.50	11.8	2.00	12.4	1.50	12.6	1.20
60	11.7	2.50	12.5	1.95	13.0	1.50	13.2	1.20
57	12.8	2.30	13.4	1.90	13.8	1.50		
55	13.4	2.07	14.1	1.85	14.4	1.50		
50	14.9	1.58	15.5	1.51	15.8	1.48		
45	16.2	1.25	16.8	1.19	17.1	1.15		
40	17.4	1.00	17.8	0.98				
35	18.6	0.78	18.8	0.77				
30	19.5	0.64	19.8	0.62				
25	20.3	0.53	20.8	0.47				
20	21.0	0.43						
15	21.3	0.40						
7	21.7	0.30						
Critical boom angle	6°		24°		44°		59°	
Standard hook	For 3.2 ton							
Hook mass	60kg							
Parts of line	1							

(4.8m)

Outriggers intermediately extended (4.8m) - over side

Boom angle (°)	Offset 7° Working radius (m)	Offset 7° Load (ton)	Offset 25° Working radius (m)	Offset 25° Load (ton)	Offset 45° Working radius (m)	Offset 45° Load (ton)	Offset 60° Working radius (m)	Offset 60° Load (ton)
83	2.7	2.50	3.9	2.00	4.9	1.50	5.4	1.20
80	3.9	2.50	5.1	2.00	6.0	1.50	6.5	1.20
75	6.0	2.50	7.1	2.00	7.9	1.50	8.3	1.20
70	8.0	2.50	9.0	2.00	9.7	1.50	10.0	1.20
65	9.9	2.50	10.8	2.00	11.3	1.50	11.6	1.20
62	11.0	2.50	11.8	2.00	12.4	1.50	12.6	1.20
60	11.7	2.23	12.5	1.90	13.0	1.50	13.2	1.20
57	12.8	1.80	13.4	1.72	13.8	1.50		
55	13.3	1.63	14.1	1.45	14.4	1.43		
50	14.8	1.21	15.4	1.16	15.8	1.11		
45	16.1	0.92	16.7	0.87	17.1	0.82		
40	17.3	0.69	18.0	0.63				
35	18.5	0.50	18.9	0.49				
30	19.5	0.36	19.8	0.35				
27	20.1	0.29	20.4	0.27				
Critical boom angle	26°		26°		44°		59°	
Standard hook	For 3.2 ton							
Hook mass	60kg							
Parts of line	1							

(4.3m)

Outriggers intermediately extended (4.3m) - over side

Boom angle (°)	Offset 7° Working radius (m)	Offset 7° Load (ton)	Offset 25° Working radius (m)	Offset 25° Load (ton)	Offset 45° Working radius (m)	Offset 45° Load (ton)	Offset 60° Working radius (m)	Offset 60° Load (ton)
83	2.7	2.50	3.9	2.00	4.9	1.50	5.4	1.20
80	3.9	2.50	5.1	2.00	6.0	1.50	6.5	1.20
75	6.0	2.50	7.1	2.00	7.9	1.50	8.3	1.20
70	8.0	2.50	9.0	2.00	9.7	1.50	10.0	1.20
65	9.9	2.50	10.8	2.00	11.3	1.50	11.6	1.20
60	11.7	1.78	12.5	1.64	13.0	1.50	13.2	1.20
55	13.3	1.26	13.9	1.21	14.4	1.15		
50	14.7	0.91	15.4	0.85	15.7	0.84		
45	16.1	0.63	16.7	0.60	17.1	0.55		
40	17.3	0.43	17.8	0.41				
35	18.5	0.26	18.9	0.25				
Critical boom angle	34°		34°		44°		59°	
Standard hook	For 3.2 ton							
Hook mass	60kg							
Parts of line	1							

19.6m Boom+4.0m Jib

(3.2m)

Outriggers intermediately extended (3.2m) - over side

Boom angle (°)	Offset 7° Working radius (m)	Offset 7° Load (ton)	Offset 25° Working radius (m)	Offset 25° Load (ton)	Offset 45° Working radius (m)	Offset 45° Load (ton)	Offset 60° Working radius (m)	Offset 60° Load (ton)
83	2.7	2.50	3.9	2.00	4.9	1.50	5.4	1.20
80	3.9	2.50	5.1	2.00	6.0	1.50	6.5	1.20
75	6.0	2.50	7.1	2.00	7.9	1.50	8.3	1.20
73	6.8	2.50	7.8	2.00	8.6	1.50	9.0	1.20
70	8.0	2.35	9.0	2.00	9.7	1.50	10.0	1.20
67	9.2	1.75	10.1	1.55	10.7	1.40	11.0	1.20
65	9.8	1.50	10.8	1.30	11.3	1.25	11.6	1.15
60	11.5	0.92	12.4	0.82	12.9	0.79	13.2	0.73
55	13.1	0.53	13.9	0.48	14.3	0.47		
52	14.2	0.32	14.8	0.32	15.2	0.30		
Critical boom angle	51°		51°		51°		59°	
Standard hook	For 3.2 ton							
Hook mass	60kg							
Parts of line	1							

19.6m Boom+5.8m Jib

(5.4m)

Outriggers fully extended (5.4m) - 360° full range

Boom angle (°)	Offset 7° Working radius (m)	Offset 7° Load (ton)	Offset 25° Working radius (m)	Offset 25° Load (ton)	Offset 45° Working radius (m)	Offset 45° Load (ton)	Offset 60° Working radius (m)	Offset 60° Load (ton)
83	3.2	2.00	4.5	1.10	6.3	0.75	7.0	0.60
80	4.6	2.00	6.1	1.10	7.4	0.75	8.1	0.60
78	5.4	2.00	7.0	1.10	8.3	0.74	8.9	0.60
75	6.7	2.00	8.2	1.05	9.4	0.72	10.0	0.60
70	8.8	1.70	10.1	0.96	11.2	0.68	11.7	0.60
65	10.8	1.40	12.0	0.87	13.0	0.66	13.3	0.60
60	12.7	1.20	13.8	0.80	14.6	0.64	14.8	0.60
55	14.5	1.05	15.5	0.75	16.1	0.63		
50	16.1	0.96	17.1	0.72	17.5	0.62		
45	17.6	0.88	18.3	0.69	18.8	0.60		
40	18.9	0.81	19.5	0.68				
37	19.7	0.77	20.2	0.67				
35	20.2	0.70	20.7	0.65				
30	21.2	0.57	21.6	0.55				
25	21.9	0.48	22.4	0.45				
20	22.7	0.39						
15	23.1	0.35						
7	23.5	0.23						
Critical boom angle	6°		24°		44°		59°	
Standard hook	For 3.2 ton							
Hook mass	60kg							
Parts of line	1							

(4.8m)

Outriggers intermediately extended (4.8m) - over side

Boom angle (°)	Offset 7° Working radius (m)	Offset 7° Load (ton)	Offset 25° Working radius (m)	Offset 25° Load (ton)	Offset 45° Working radius (m)	Offset 45° Load (ton)	Offset 60° Working radius (m)	Offset 60° Load (ton)
83	3.2	2.00	4.5	1.10	6.3	0.75	7.0	0.60
80	4.6	2.00	6.1	1.10	7.4	0.75	8.1	0.60
78	5.4	2.00	7.0	1.10	8.3	0.74	8.9	0.60
75	6.7	2.00	8.2	1.05	9.4	0.72	10.0	0.60
70	8.8	1.70	10.1	0.96	11.2	0.68	11.7	0.60
65	10.8	1.40	12.0	0.87	13.0	0.66	13.3	0.60
60	12.7	1.20	13.8	0.80	14.6	0.64	14.8	0.60
55	14.5	1.05	15.5	0.75	16.1	0.63		
50	16.1	0.96	17.1	0.72	17.5	0.62		
48	16.8	0.90	17.6	0.71	18.0	0.61		
45	17.6	0.81	18.3	0.68	18.8	0.60		
40	18.9	0.61	19.6	0.58				
35	20.2	0.43	20.6	0.43				
30	21.2	0.32	21.5	0.32				
27	21.5	0.28	22.0	0.26				
Critical boom angle	26°		26°		44°		59°	
Standard hook	For 3.2 ton							
Hook mass	60kg							
Parts of line	1							

19.6m Boom+5.8m Jib

(4.3m)

Outriggers intermediately extended (4.3m) - over side

Boom angle (°)	Offset 7° Working radius (m)	Offset 7° Load (ton)	Offset 25° Working radius (m)	Offset 25° Load (ton)	Offset 45° Working radius (m)	Offset 45° Load (ton)	Offset 60° Working radius (m)	Offset 60° Load (ton)
83	3.2	2.00	4.5	1.10	6.3	0.75	7.0	0.60
80	4.6	2.00	6.1	1.10	7.4	0.75	8.1	0.60
78	5.4	2.00	7.0	1.10	8.3	0.74	8.9	0.60
75	6.7	2.00	8.2	1.05	9.4	0.72	10.0	0.60
70	8.8	1.70	10.1	0.96	11.2	0.68	11.7	0.60
65	10.8	1.40	12.0	0.87	13.0	0.66	13.3	0.60
60	12.7	1.20	13.8	0.80	14.6	0.64	14.8	0.60
55	14.5	1.05	15.5	0.75	16.1	0.63		
54	14.8	1.00	15.8	0.74	16.4	0.63		
50	16.1	0.80	17.1	0.71	17.5	0.62		
45	17.6	0.55	18.4	0.52	18.8	0.50		
40	18.9	0.37	19.6	0.35				
36	19.9	0.25	20.4	0.25				
Critical boom angle	35°		35°		44°		59°	
Standard hook	For 3.2 ton							
Hook mass	60kg							
Parts of line	1							

(3.2m)

Outriggers intermediately extended (3.2m) - over side

Boom angle (°)	Offset 7° Working radius (m)	Offset 7° Load (ton)	Offset 25° Working radius (m)	Offset 25° Load (ton)	Offset 45° Working radius (m)	Offset 45° Load (ton)	Offset 60° Working radius (m)	Offset 60° Load (ton)
83	3.2	2.00	4.5	1.10	6.3	0.75	7.0	0.60
80	4.6	2.00	6.1	1.10	7.4	0.75	8.1	0.60
78	5.4	2.00	7.0	1.10	8.3	0.74	8.9	0.60
75	6.7	2.00	8.2	1.05	9.4	0.72	10.0	0.60
70	8.8	1.70	10.1	0.96	11.2	0.68	11.7	0.60
68	9.7	1.50	10.9	0.92	12.0	0.67	12.4	0.60
65	10.8	1.30	12.0	0.87	13.0	0.66	13.3	0.60
60	12.7	0.79	13.9	0.70	14.6	0.63	14.8	0.60
55	14.4	0.45	15.5	0.41	16.1	0.40		
52	15.5	0.28	16.4	0.27	17.0	0.25		
Critical boom angle	51°		51°		51°		59°	
Standard hook	For 3.2 ton							
Hook mass	60kg							
Parts of line	1							

Kato CR-200Ri

Lifting capacities

Based on ISO 4035
Not exceed 75% of static tipping loads

28.0m Boom+4.0m Jib

(5.4m)

Outriggers fully extended (5.4m) - 360° full range

Boom angle (°)	Offset 7° Working radius (m)	Offset 7° Load (ton)	Offset 25° Working radius (m)	Offset 25° Load (ton)	Offset 45° Working radius (m)	Offset 45° Load (ton)	Offset 60° Working radius (m)	Offset 60° Load (ton)
83	4.2	2.50	5.4	2.00	6.4	1.50	6.8	1.20
80	6.0	2.50	7.2	2.00	8.0	1.50	8.4	1.20
77	7.8	2.50	8.9	2.00	9.6	1.50	10.0	1.20
75	9.0	2.50	9.9	1.90	10.7	1.50	11.0	1.20
70	11.6	2.05	12.5	1.65	13.2	1.35	13.4	1.20
65	14.2	1.65	15.0	1.40	15.6	1.20	15.7	1.20
60	16.5	1.30	17.3	1.20	17.7	1.10	17.9	1.10
57	17.9	1.10	18.6	1.05	18.9	1.02		
55	18.7	0.96	19.5	0.90	19.7	0.89		
50	20.7	0.66	21.3	0.64	21.6	0.63		
45	22.5	0.45	23.0	0.44	23.4	0.41		
40	24.2	0.28	24.6	0.28				
38	24.8	0.23	25.3	0.22				
Critical boom angle	37°		37°		44°		59°	
Standard hook	For 3.2 ton							
Hook mass	60kg							
Parts of line	1							

(4.8m)

Outriggers intermediately extended (4.8m) - over side

Boom angle (°)	Offset 7° Working radius (m)	Offset 7° Load (ton)	Offset 25° Working radius (m)	Offset 25° Load (ton)	Offset 45° Working radius (m)	Offset 45° Load (ton)	Offset 60° Working radius (m)	Offset 60° Load (ton)
83	4.2	2.50	5.4	2.00	6.4	1.50	6.8	1.20
80	6.0	2.50	7.2	2.00	8.0	1.50	8.4	1.20
77	7.8	2.50	8.9	2.00	9.6	1.50	10.0	1.20
75	9.0	2.50	9.9	1.90	10.7	1.50	11.0	1.20
70	11.6	2.05	12.5	1.65	13.2	1.35	13.4	1.20
67	13.1	1.80	14.0	1.50	14.7	1.25	14.8	1.20
65	14.2	1.56	15.0	1.40	15.6	1.20	15.7	1.20
63	15.1	1.33	16.0	1.23	16.5	1.15	16.6	1.15
60	16.4	1.05	17.2	0.99	17.7	0.96	17.9	0.93
55	18.6	0.68	19.3	0.65	19.7	0.63		
50	20.5	0.43	21.2	0.40	21.5	0.40		
47	21.7	0.30	22.2	0.30	22.5	0.29		
Critical boom angle	46°		46°		46°		59°	
Standard hook	For 3.2 ton							
Hook mass	60kg							
Parts of line	1							

(4.3m)

Outriggers intermediately extended (4.3m) - over side

Boom angle (°)	Offset 7° Working radius (m)	Offset 7° Load (ton)	Offset 25° Working radius (m)	Offset 25° Load (ton)	Offset 45° Working radius (m)	Offset 45° Load (ton)	Offset 60° Working radius (m)	Offset 60° Load (ton)
83	4.2	2.50	5.4	2.00	6.4	1.50	6.8	1.20
80	6.0	2.50	7.2	2.00	8.0	1.50	8.4	1.20
77	7.8	2.50	8.9	2.00	9.6	1.50	10.0	1.20
75	9.0	2.50	9.9	1.90	10.7	1.50	11.0	1.20
72	10.6	2.15	11.5	1.70	12.2	1.40	12.9	1.20
70	11.6	1.95	12.5	1.60	13.2	1.35	13.4	1.20
67	13.2	1.48	14.1	1.36	14.7	1.23	14.8	1.20
65	14.0	1.27	15.0	1.14	15.6	1.09	15.7	1.08
60	16.3	0.79	17.2	0.72	17.6	0.71	17.9	0.65
55	18.4	0.47	19.2	0.43	19.5	0.43		
52	19.7	0.31	20.4	0.29	20.7	0.29		
Critical boom angle	51°		51°		51°		59°	
Standard hook	For 3.2 ton							
Hook mass	60kg							
Parts of line	1							

28.0m Boom+4.0m Jib

(3.2m)

Outriggers intermediately extended (3.2m) - over side

Boom angle (°)	Offset 7° Working radius (m)	Offset 7° Load (ton)	Offset 25° Working radius (m)	Offset 25° Load (ton)	Offset 45° Working radius (m)	Offset 45° Load (ton)	Offset 60° Working radius (m)	Offset 60° Load (ton)
83	4.2	2.50	5.4	2.00	6.4	1.50	6.8	1.20
80	6.0	2.50	7.2	2.00	8.0	1.50	8.4	1.20
77	7.8	2.50	8.9	2.00	9.6	1.50	10.0	1.20
75	8.8	2.10	9.9	1.80	10.7	1.50	11.0	1.20
73	10.0	1.60	10.9	1.45	11.7	1.30	12.0	1.20
70	11.3	1.17	12.3	1.04	13.1	0.95	13.4	0.92
65	13.7	0.60	14.7	0.53	15.3	0.51	15.5	0.50
Critical boom angle	64°		64°		64°		64°	
Standard hook	For 3.2 ton							
Hook mass	60kg							
Parts of line	1							

28.0m Boom+5.8m Jib

(5.4m)

Outriggers fully extended (5.4m) - 360° full range

Boom angle (°)	Offset 7° Working radius (m)	Offset 7° Load (ton)	Offset 25° Working radius (m)	Offset 25° Load (ton)	Offset 45° Working radius (m)	Offset 45° Load (ton)	Offset 60° Working radius (m)	Offset 60° Load (ton)
83	4.7	2.00	6.3	1.10	7.7	0.75	8.4	0.60
80	6.6	2.00	8.1	1.10	9.3	0.74	10.0	0.60
75	9.7	2.00	11.0	1.05	12.1	0.71	12.6	0.60
70	12.6	1.65	13.7	0.93	14.6	0.68	15.1	0.60
65	15.2	1.35	16.3	0.85	17.0	0.65	17.3	0.60
60	17.6	1.15	18.7	0.78	19.4	0.63	19.5	0.60
58	18.7	1.05	19.6	0.77	20.2	0.62		
55	20.0	0.87	20.9	0.74	21.4	0.62		
50	22.0	0.61	23.0	0.57	23.4	0.57		
45	24.0	0.41	24.7	0.40	24.8	0.40		
40	25.7	0.26	26.3	0.25				
38	26.4	0.20	27.0	0.20				
Critical boom angle	37°		37°		44°		59°	
Standard hook	For 3.2 ton							
Hook mass	60kg							
Parts of line	1							

(4.8m)

Outriggers intermediately extended (4.8m) - over side

Boom angle (°)	Offset 7° Working radius (m)	Offset 7° Load (ton)	Offset 25° Working radius (m)	Offset 25° Load (ton)	Offset 45° Working radius (m)	Offset 45° Load (ton)	Offset 60° Working radius (m)	Offset 60° Load (ton)
83	4.7	2.00	6.3	1.10	7.7	0.75	8.4	0.60
80	6.6	2.00	8.1	1.10	9.3	0.74	10.0	0.60
75	9.7	2.00	11.0	1.05	12.1	0.71	12.6	0.60
70	12.6	1.65	13.7	0.93	14.6	0.68	15.1	0.60
65	15.2	1.33	16.3	0.85	17.0	0.65	17.3	0.60
63	16.2	1.21	17.2	0.82	18.0	0.64	18.2	0.60
60	17.6	0.95	18.7	0.78	19.4	0.63	19.5	0.60
57	19.1	0.72	20.0	0.70	20.6	0.62		
55	19.9	0.61	20.9	0.58	21.4	0.57		
50	21.9	0.38	22.8	0.37	23.3	0.35		
47	23.1	0.27	24.0	0.25	24.3	0.25		
Critical boom angle	46°		46°		46°		59°	
Standard hook	For 3.2 ton							
Hook mass	60kg							
Parts of line	1							

28.0m Boom+5.8m Jib

(4.3m)

Outriggers intermediately extended (4.3m) - over side

Boom angle (°)	Offset 7° Working radius (m)	Offset 7° Load (ton)	Offset 25° Working radius (m)	Offset 25° Load (ton)	Offset 45° Working radius (m)	Offset 45° Load (ton)	Offset 60° Working radius (m)	Offset 60° Load (ton)
83	4.7	2.00	6.3	1.10	7.7	0.75	8.4	0.60
80	6.6	2.00	8.1	1.10	9.3	0.74	10.0	0.60
75	9.7	2.00	11.0	1.05	12.1	0.71	12.6	0.60
70	12.6	1.65	13.7	0.93	14.6	0.68	15.1	0.60
68	13.7	1.45	14.8	0.89	15.6	0.66	16.0	0.60
65	15.1	1.14	16.3	0.85	17.0	0.65	17.3	0.60
62	16.1	0.94	17.8	0.78	18.5	0.64	18.7	0.60
60	17.4	0.72	18.7	0.65	19.4	0.62	19.5	0.60
55	19.7	0.42	20.9	0.37	21.4	0.37		
52	21.0	0.28	22.0	0.26	22.5	0.25		
Critical boom angle	51°		51°		51°		59°	
Standard hook	For 3.2 ton							
Hook mass	60kg							
Parts of line	1							

(3.2m)

Outriggers intermediately extended (3.2m) - over side

Boom angle (°)	Offset 7° Working radius (m)	Offset 7° Load (ton)	Offset 25° Working radius (m)	Offset 25° Load (ton)	Offset 45° Working radius (m)	Offset 45° Load (ton)	Offset 60° Working radius (m)	Offset 60° Load (ton)
83	4.7	2.00	6.3	1.10	7.7	0.75	8.4	0.60
80	6.6	2.00	8.1	1.10	9.3	0.74	10.0	0.60
77	8.5	2.00	9.9	1.07	11.0	0.72	11.6	0.60
75	10.0	1.73	11.0	1.05	12.1	0.71	12.6	0.60
72	11.3	1.30	12.6	0.96	13.6	0.69	14.1	0.60
70	12.3	1.03	13.7	0.89	14.6	0.68	15.1	0.60
68	13.3	0.80	14.7	0.70	15.6	0.66	16.0	0.60
65	14.7	0.54	16.3	0.44	17.0	0.44	17.3	0.43
Critical boom angle	64°		64°		64°		64°	
Standard hook	For 3.2 ton							
Hook mass	60kg							
Parts of line	1							

Kato CR-200Ri

Working range

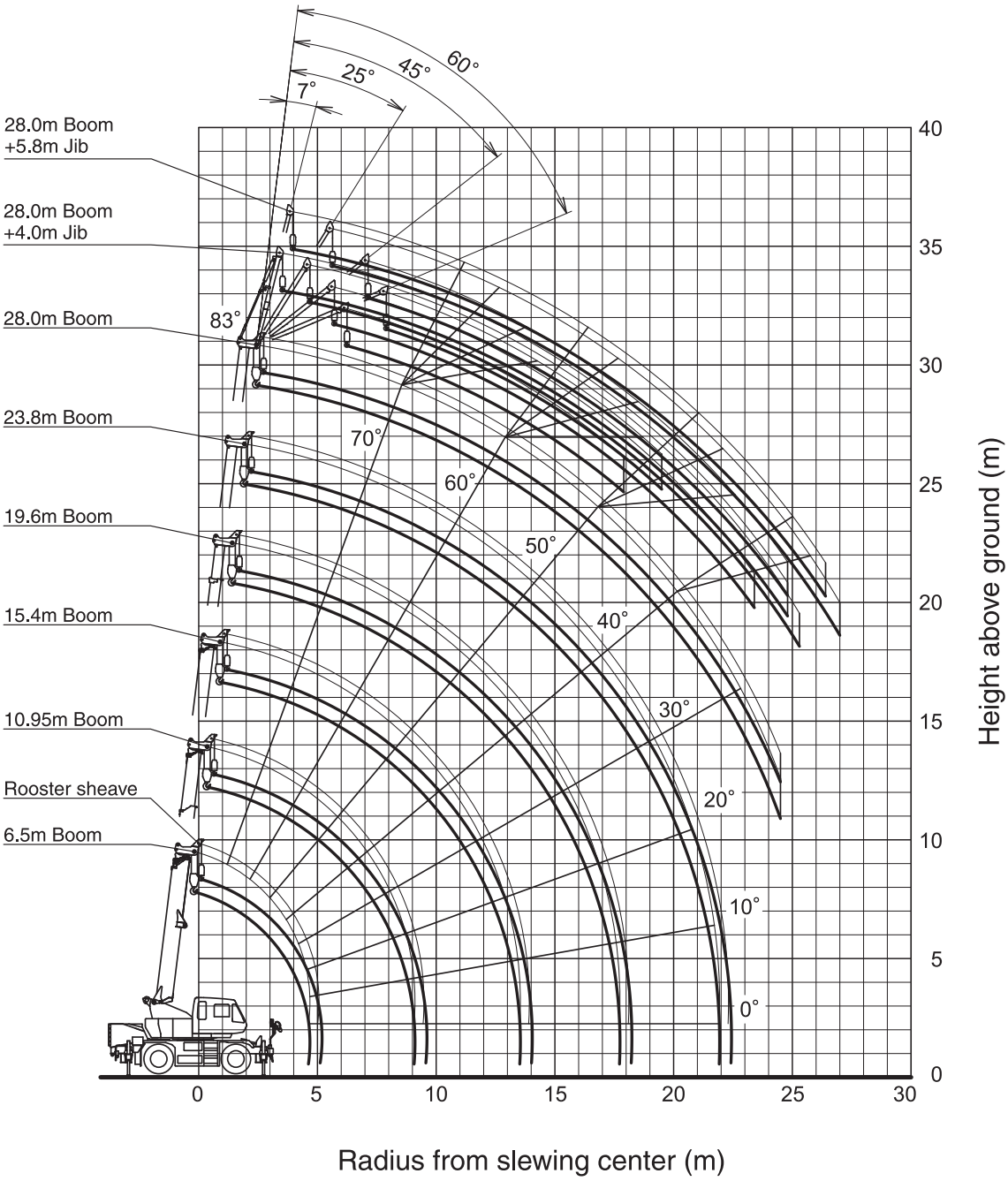

Notes:

1. This diagram does not include deflection of Boom and Jib.
2. The outriggers are fully extended.

Kato CR-200Ri

Minimum path width

●Right turn in two-wheel steering mode

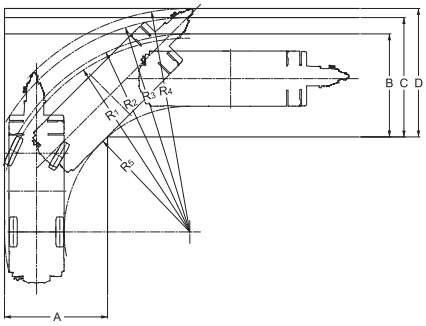

- R_1=8.00m (Minimum turning radius)
- R_2=8.18m (Turning radius of extremely outer tire)
- R_3=8.85m (Chassis turning radius)
- R_4=9.23m (Boom end turning radius)
- R_5=5.19m (Turning radius extremely chassis inner)
- A=4.26m (Width of entrance)
- B=4.26m (Width of wheel exit)
- C=4.93m (Width of chassis exit)
- D=5.31m (Width of exit at end of boom)

●Right turn in 4-wheel steering mode

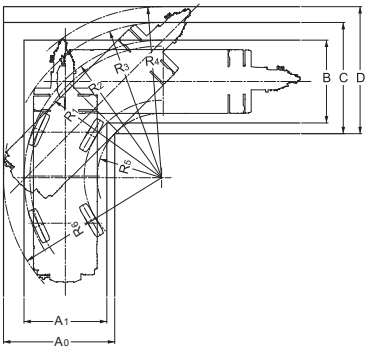

- R_1=4.70m (Minimum turning radius)
- R_2=4.91m (Turning radius of extremely outer tire)
- R_3=5.54m (Chassis turning radius)
- R_4=6.11m (Boom end turning radius)
- R_5=2.30m (Turning radius extremely chassis inner)
- R_5=5.64m (Turning radius at the rear end of the chassis)
- A_0=3.97m (Width of chassis entrance)
- A_1=2.96m (Width of wheel entrance)
- B =2.96m (Width of wheel exit)
- C =3.97m (Width of chassis exit)
- D =4.54m (Width of exit at end of boom)

Note: The above values are based on calculations.

Overall view

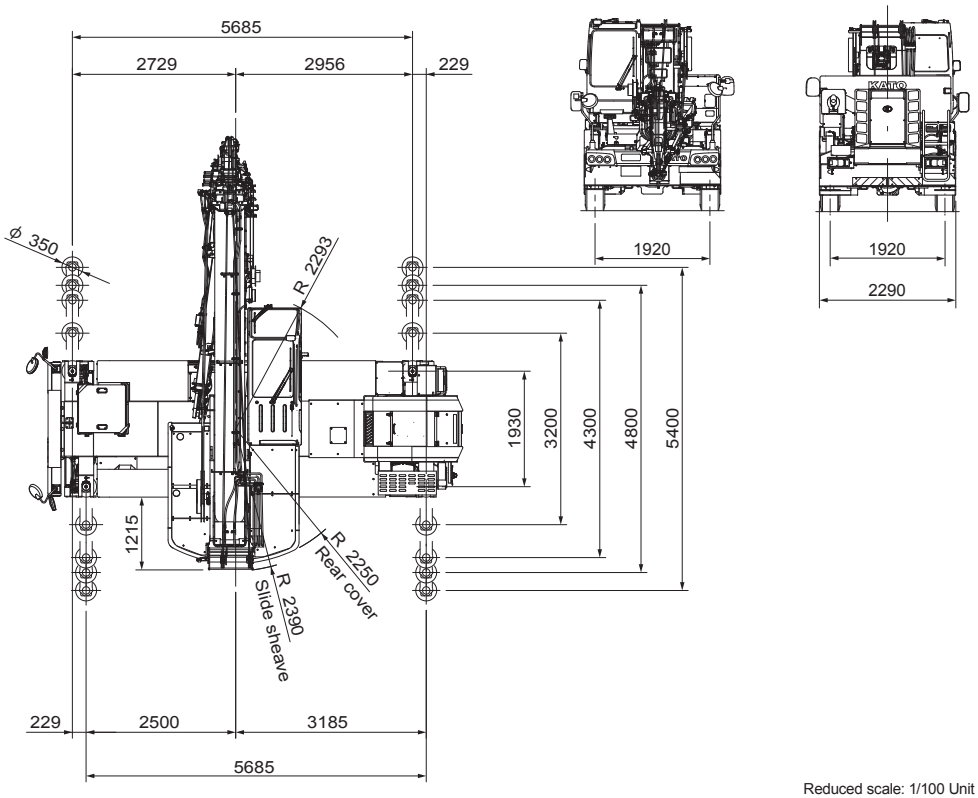

Reduced scale: 1/100 Unit (mm)

Kato CR-200Ri

Overall view

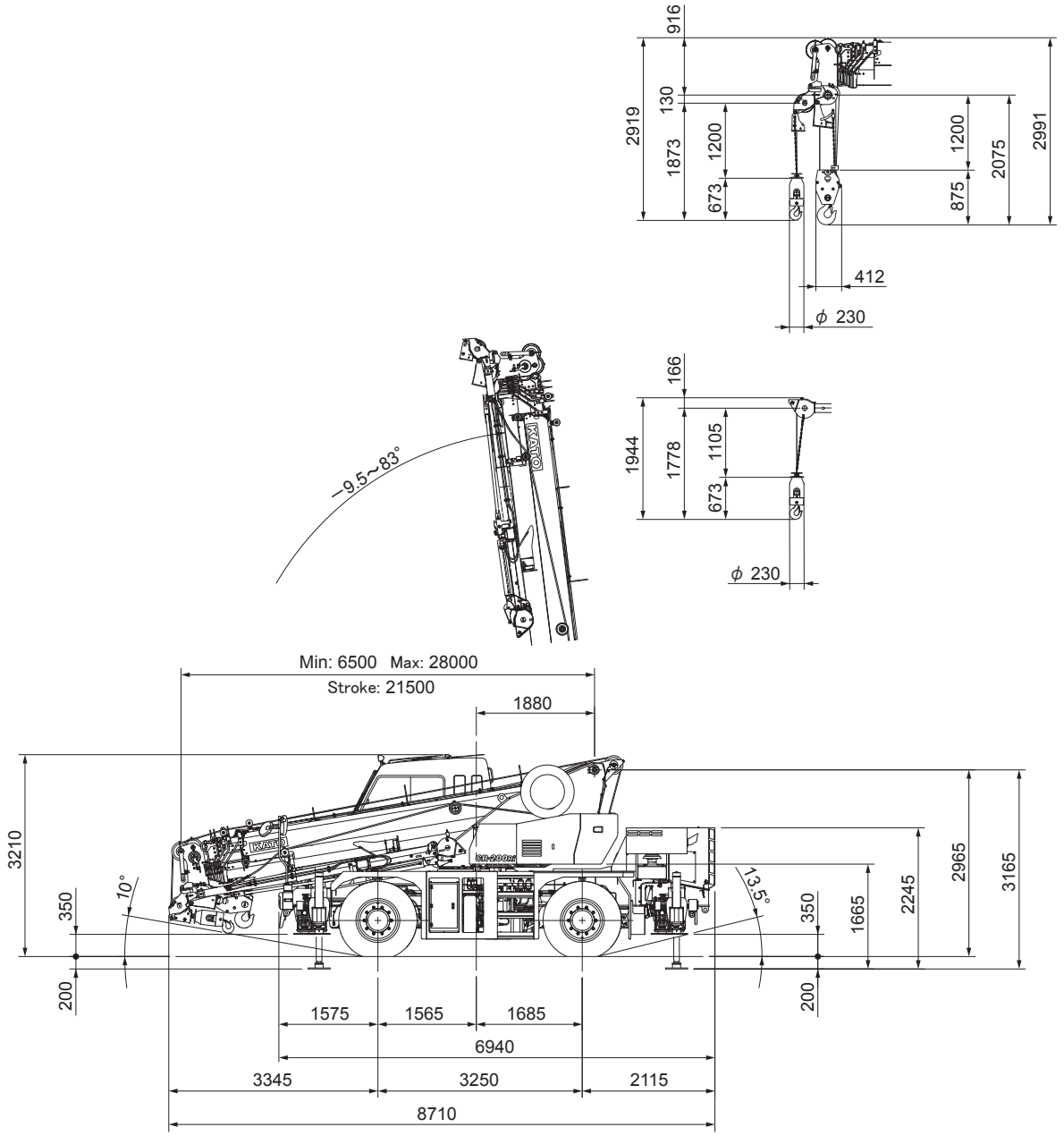

Ramp break over angle: 23°
When the suspension is locked, the height shall be the overall height: - 40 mm.
(Suspension cylinder completely retracted)

Reduced scale: 1/100 Unit (mm)

Southern Cranes & Access Ltd
Pollards Way, Southwater, Horsham, RH13 9AQ

Access hire: 01403 339105 . Crane hire: 01403 790874
sales@southerncranes.co.uk . www.southerncranes.co.uk